OPERATION MANUAL

DOUBLE MITER SAW FOR ALUMINUM

JS-100

⚠ CAUTION

1. Read the operation manual carefully before operation.
2. Keep this operation manual for future reference.

TABLE OF CONTENTS

TABLE OF CONTENTS

GENERAL SAFETY RULES FOR ALUMINUM PROCESSING MACHINERY

⚠ WARNING

Do not attempt to operate until you have read thoroughly and understood completely all instructions, rules etc. contained in this manual. Failure to comply can result in accidents involving fire, electric shock, or serious personal injury. Keep this operation manual and review frequently for continuous safe operations.

1. Know your machine. For your own safety, read the operation manual carefully. Learn its applications and limitations, as well as specific potential hazards pertinent to this machine.

2. Make sure the machine is properly grounded.

3. Keep guards in place and in working order. If a guard must be removed for maintenance or cleaning, make sure it is properly reattached before using the machine again.

4. Remove adjusting keys and wrenches. Form habit of checking to see that keys and adjusting wrenches are removed from the machine before turning it on.

GENERAL SAFETY RULES FOR ALUMINUM PROCESSING MACHINERY

5. Keep work area clean. Cluttered areas and workbenches increase the likelihood of an accident.

6. Do not use in dangerous environments. Do not use machine in damp or wet locations, or expose them to rain. Keep work area well illuminated.

7. Keep children away. All visitors should be kept at a safe distance from work area.

8. Make workshop childproof, with padlocks, master switches, or by removing starter keys.

9. Do not force the machine. It will do the job better and be safer at the rate for which it was designed.

10. Use the right tools. Do not force the machine or attachments to do a job for which they were not designed. Contact the manufacturer or distributor if there is any question about the machine's suitability for a particular job.

11. Wear proper apparel. Avoid loose clothing, gloves, neckties, rings, bracelets, or jewelry, which could be caught in moving parts. Nonstop footwear is recommended. Wear protective hair covering to contain long hair.

12. Always use safety glasses, also use face or dust mask.

13. Secure work.

14. Keep proper footing and balance at all times.

15. Maintain machine in top conditions. Keep machine clean for best and safest performance. Follow instructions for lubricating and changing accessories.

GENERAL SAFETY RULES FOR ALUMINUM PROCESSING MACHINERY

16. Disconnect machine from power source, before servicing and when changing accessories, or when mounting and remounting motor.

17. Avoid accidental starting. Make sure switch is in the "off" position before plugging in power cord.

18. Use recommended accessories. Consult the operation manual for recommended accessories.

19. Check damaged parts. Before further use of the machine, a guard or other part that is damaged should be carefully checked to make sure that it will operate properly and perform its intended function. Check for alignment of moving parts, binding of moving parts, breakage of parts, mounting, and any other condition that may affect its operation. Guards or other parts that are damaged should be properly repaired or replaced.

20. Never leave machine running unattended. Turn power off. Do not leave the machine until it comes to a complete stop.

21. Do not use machine while under the effects of drags, alcohol, or any medication.

22. Always wear a face or dust mask if operates a lot of sawdust and or aluminum chips. Always operate the machine in a well-ventilated area and provide for proper dust removal. Use an aluminum dust collection system whenever possible.

ADDITIONAL SAFETY RULES FOR DOUBLE MITER SAW

1. Read and understand the operation manual before operation.
2. Always follow safety instructions.
3. Keep hands away the cutting area.
4. Do not remove sawblade guards.
5. Always disconnect the power source before making any adjustments.
6. Do not operate the machine in case air pressure does not reach the normal working pressure. Normal working pressure for this cut off saw is 5.5kg/cm^2.
7. Make sure the workpiece is clamped securely.
8. Make sure the two-sawblade running directions are correct.
9. Never try to remove the waste until the power is off and sawblade has stopped.
10. Always keep sawblades sharp.

MACHINE SPECIFICATIONS

JS-100

■ SPECIFICATIONS

[illegible]	[illegible]
Angle of cut	45°
Width of cut	100mm
Height of cut	100mm
Sawblade sizes	355mm x 30mm x 3.0mm x 120T
Spindle motors	2HP x 2
Spindle speed	3440RPM
Clamping air cylinders	Vertical clamping x 1pc Horizontal clamping x 2pcs
Cutting method	Pivot action
Height of table	950mm
N.W. / G.W.	300 / 370kg
Machine dimensions	1370 x 830 x 1430mm
Packing dimensions	1500 x 950 x 1620mm

STANDARD ACCESSORIES

◎ T.C.T. SAWBLADES... 2PCS

Sawblade specifications: 355mm diameter, 3.0mm thick, 30mm bore, 120 teeth.

Blades are fitted on the machine.

◎ TOOL BOX WITH SERVICE TOOLS...1SET

UNPACKING MACHINE

The Double miter Saw is packed in one wooden case for shipment. When you receive the machine, carefully unpack the machine to prevent damage. Check the machine to see if all parts are present and free of damage during transportation. If any parts are missing, contact your local distributor or the machine manufacturer immediately.

Do not attempt to assemble or operate the machine without all parts present and in working order.

MOVING THE MACHINE

The Double Miter Saw is moved or lifted by a fork lifter. The net weight for this machine is 300 kg, and gross weight is 370 kg. Make sure your fork lifter capacity is sufficient to lift the machine.

Care should be taken for the machine balance when moving or lifting the machine. Carefully lower the machine to the concrete floor, and prevent it from bumping against the concrete floor.

⚠ WARNING

Serious injury may occur if safety rules for moving the machine are neglected.

INSTALLING MACHINE

Install this machine on a rigid and plain enough concrete floor. It is not necessary to bolt down the foundation bolts into the concrete floor.

When installing the machine, be sure you have left proper space around the machine for convenient handling of aluminum material.

There are 4 leveling screws provided at four corners of the machine. Turn these 4 leveling screws until they touch the concrete floor surface. This will ensure the total weight of the machine is uniformly supported on the 4 leveling screws.

REMOVING RUST PREVENTATIVE OIL

The machine is coated with rust preventative oil before shipment to avoid rusting during transportation. Once you have unpacked the machine, thoroughly remove the rust preventative oil by using a clean cloth soaked in kerosene.

Do not use gasoline or lacquer thinner to remove rust preventative oil, because it may damage the painted surface of the machine.

ELECTRIC CONTROL PANEL

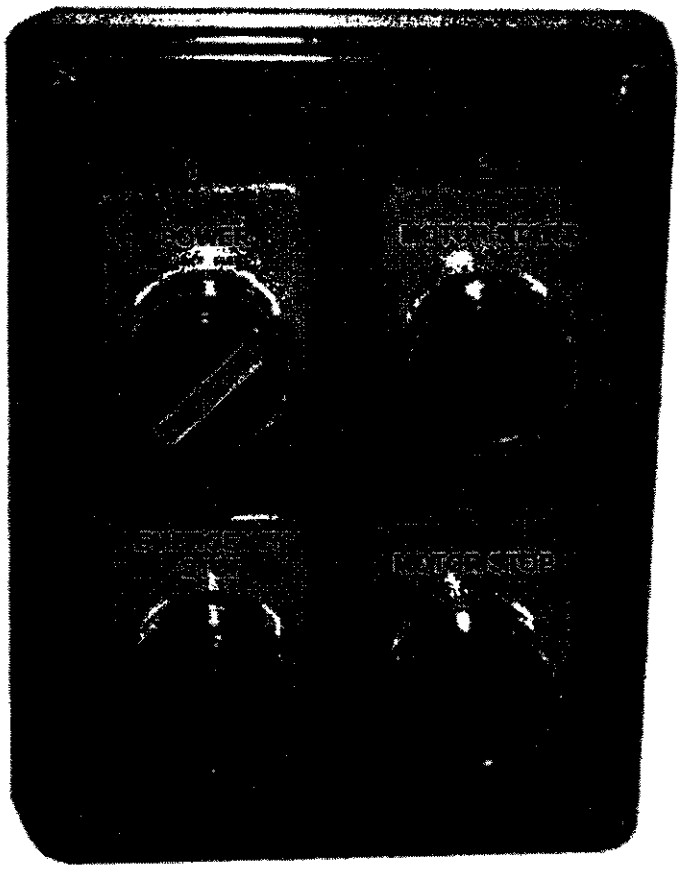

SWITCHES FUNCTION ON ELECTRIC CONTROL PANEL

1. POWER SWITCH:

When this switch is turned on, the machine is then under powered and ready for operation.

When this switch is turned off, the power will be shut off.

2. MOTOR START SWITCH:

When this switch is pressed, the two-sawblade motors start running simultaneously.

3. MOTOR STOP SWITCH:

When this switch is pressed, the two-sawblade motors stop simultaneously.

4. EMGENCY STOP SWITCH:

During operating the machine, in case any abnormal motion or emergency condition occurs, the operator must press this EMERGENCY STOP SWITCH immediately. Then all motions of the machine stop immediately.

When the emergency stop switch is pressed, the two sawblades will raise up then the two clamps raise up to release workpiece.

To restart the machine running, you need to reset the emergency stop switch by turning it clockwise.

ELECTRIC WIRING DIAGRAM

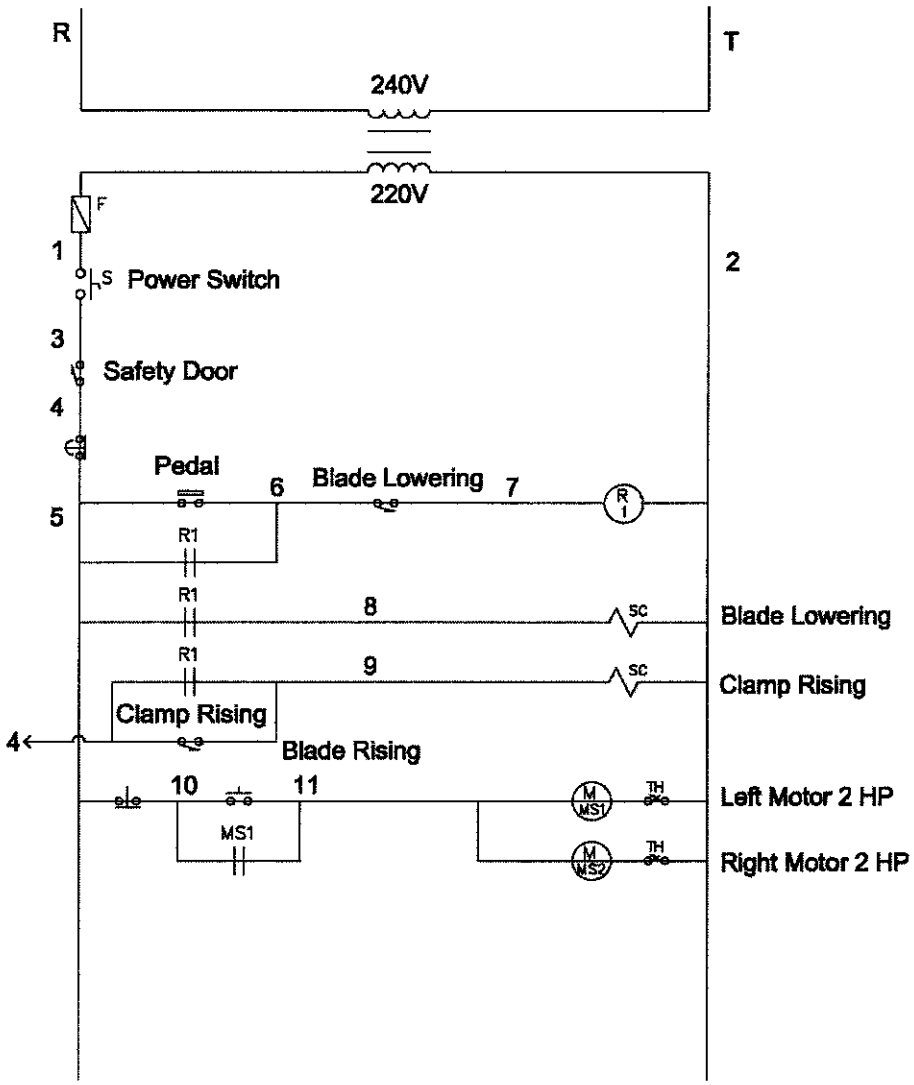

E,R,S,T,	U,V,W,E,	U1,V1,W1,E	8, 2 ,9	5,6	6,7	4,9	3,4	1,3,2,5,10,11
	Left Blade	Right Blade	Blade Air Valve / Clamp Air Valve	Pedal	Blade Lowering	Clamp Rising	Safety Door	Operation Box

CONNECTING POWER WIRES

⚠ WARNING

Power wires connection is made only by a qualified electric technician.

⚠ WARNING

Be sure to disconnect the machine from power source before connecting power wires.

1. This machine has been wired at the manufacturer's factory before shipment according to the customer's specified voltage. When connecting the machine to your factory power source, make sure your power source has the same voltage, hertz and phase as that pre-wired on the machine.

2. The power wires are connected to the junction box, located at the right side of the machine.

3. Open the junction box cover, and insert the power wires through the wire fixing nut.

CONNECTING POWER WIRES

4. Fasten the power wires to the terminals in the junction box.

5. Fix the power wires by turning the wire fixing nut.

6. Properly connect the ground wire to avoid the danger of electric shock.

7. Once the power wires have been connected to the terminals in the junction box, then you should check if they are connected to the correct terminals or not. Refer to next page when checking power wire connection.

CHECKING POWER WIRE CONNECTION

After the power wires have been connected, it is necessary to check if the power wires are connected to the correct terminals. This can be identified by the sawblade running direction.

Checking wire connection by making a running test according to following procedures:

1. Press the MOTOR START SWITCH (2) on the control panel, then immediately press the MOTOR STOP SWITCH (3) on the control panel.

2. When the two-sawblade running speed slow down, at this time check to see if the two sawblades run to correct directions.

3. The normal condition is the right sawblade should run counter-clockwise, and the left sawblade should run clockwise.

4. There are two arrowheads attached near the sawblade spindle quill for individually indicating each sawblade running direction.

⚠ WARNING

Do not open the front cover to check the arrowheads until both sawblade have come to a complete stop.

CHECKING POWER WIRE CONNECTION

5. If the two sawblades run to correct directions, it means power wires are connected to correct terminals.

6. If the two sawblades run to opposite directions, then you need to change any two of the three phase power wires to obtain the correct running directions of sawblades.

⚠ WARNING

Turn power off and disconnect the machine from power source before changing power wire connection.

AIR CIRCUIT DIAGRAM

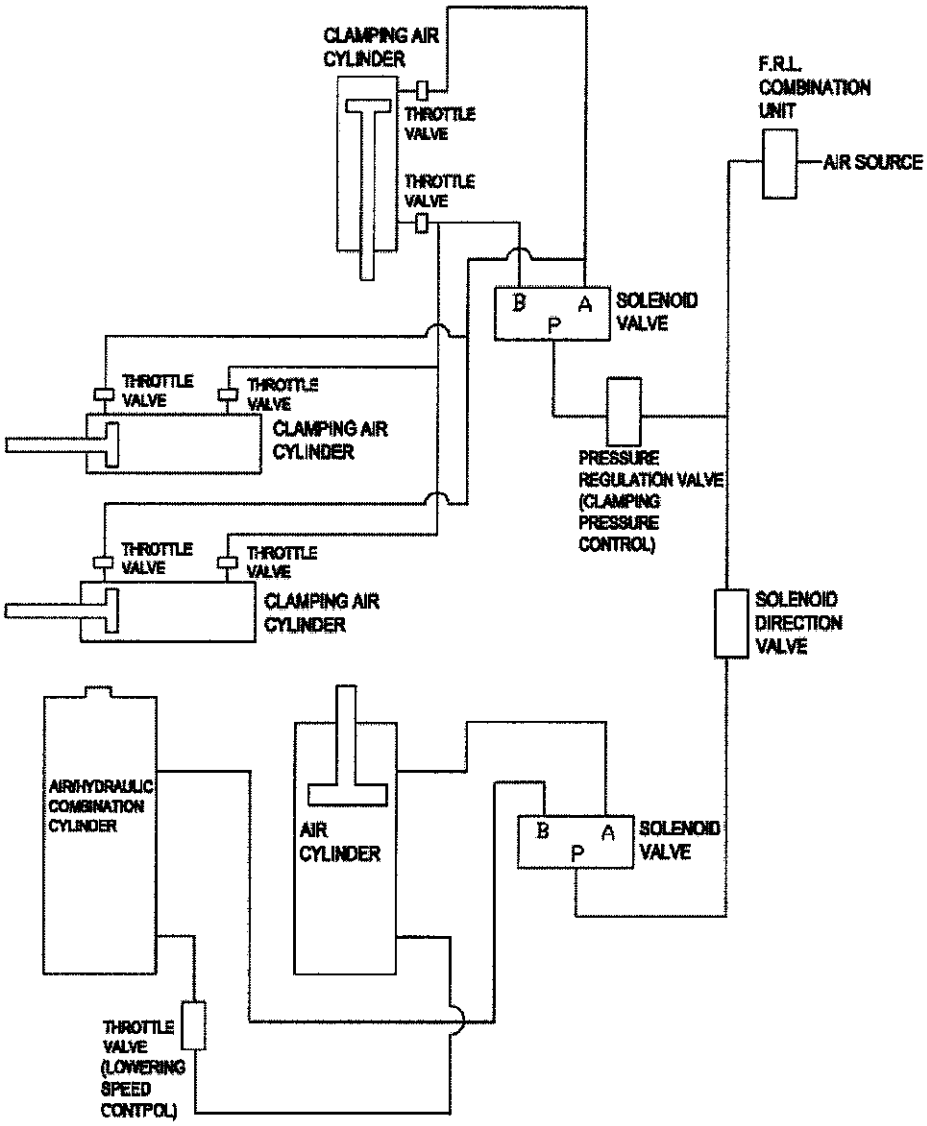

REPLACING SAWBLADE

⚠ WARNING

Make sure the power has been turned off before replacing sawblade.

1. Turn power off before replacing the sawblades.

2. Open the front cover of the machine.

3. Raise or lower the two sawblades to proper position to facilitate your replacing job.

4. Fix the sawblade spindle by using a 14mm open-end wrench. Then use a 19mm open-end wrench to loosen the sawblade lock screw.

5. The sawblade spindle for the right sawblade has right thread. Turn the sawblade lock screw counter-clockwise for loosening.

6. The sawblade spindle for the left sawblade has left thread. Turn the sawblade lock screw clockwise for loosening.

7. Take out the sawblade clamping plate and the right and left sawblade.

ADJUSTING WORKPIECE CLAMPING PRESSURE

- ○ The workpiece clamping pressure should be properly adjusted so that the workpiece can be pressed firmly by the air cylinders.
- ○ If the workpiece clamping pressure is adjusted too large, it would cause aluminum deformation.
- ○ The workpiece clamping pressure is adjusted by turning the pressure regulation knob, located in the control box. Open the control box door, then you will find it.
- ○ Pulling the pressure regulation knob before turning it for adjusting pressure. Push it down after pressure has been adjusted.
- ○ The workpiece clamping pressure can be read on the pressure gauge.
- ○ The workpiece clamping pressure is normally set at about $2kg/cm^2$.

WORKING AIR PRESSURE

The machine requires a working air pressure of above 5.5 kg/cm^2.

The working air pressure should be properly set at your factory air source.

If the working air pressure is less than 5.5 kg/cm^2, it would cause the sawblade raising speed slow down.

ADJUSTING SAWBLADE DOWNFEED SPEED

The sawblades downfeed motions are driven through an air/hydraulic combination cylinder. A flow control valve, provided at the right side of the machine, is used for adjusting the sawblades downfeed speed.

Sawblades downfeed speed is adjusted according to size and thickness of aluminum material, and sharpness of sawblades. In general, low speed is used for large and thick aluminum, while high speed is used for small and thin aluminum.

Turn the flow control valve clockwise for reducing sawblades downfeed speed. Turn it counter-clockwise for increasing speed.

SPRAYMIST COOLING SYSTEM

1. Move the spraymist toggle switch downward to turn on.

2. Treadle on the foot switch to lower the sawblades, then spray valve will spray oil mist automatically to lubricate the sawblades. When the sawblades rise up, the sprayer will stop.

3. The top of the oil nipple has an adjustment screw that can adjust the spraymist amount. Turn the adjustment screw clockwise for reducing spraymist amount. Turn it counter-clockwise for increasing spraymist amount.

4. If the spraymist is not available, move the spraymist toggle switch to the horizontal position.

5. Take care if the lubricant in the cutting oil bucket located at the left side of the machine is sufficient. Using a thinner and water-soluble lubricant is recommended. (Water to oil ratio is 20:1)

ADJUSTING V-BELTS TENSION

After the machine has been operated for a long period, the V-belts that transmit power to sawblades may loosen gradually. At this time you need to adjust V-belts tension properly.

Make V-belts tension according to following procedures:

1. Turn power off.

2. Open the front cover. It is equipped with a power off switch. When the cover is opened, the power source will cut off automatically. However, care should be taken do not open the front cover until the sawblades have come to a complete stop.

3. The right and left sawblades are transmitted by two V-belts individually.

4. Before adjusting the V-belts tension, you need to loosen the fix nut by using an open-end wrench.

5. Use an open-end wrench to turn the V-belts tension adjustment screw for moving motor forward. This will tighten the V-belts tension.

6. When a proper V-belts tension is adjusted, tighten the fix nut securely.

ADJUSTING CLAMPING SPEED

1. The workpiece to be cut is clamped by one air cylinder. Open the front cover, then you will find them.

2. The air cylinder has two flow control valves located at top and bottom position.

3. The top flow control valve is used for adjusting the air cylinder raising speed.

4. The bottom flow control valve is used for adjusting the air cylinder lowering speed.

ABNORMAL SAWBLADE DOWNFEED SPEED

During operation if you find the sawblades downfeed speed can not slow down when they approach the workpiece, this problem is often caused by insufficient oil in the air/hydraulic combination cylinder.

This cylinder is located at the right side of the machine. It enables the sawblades to approach the workpiece at a low speed, which prevents the sawblades from fast bumping against the workpiece.

The operator must check frequently if the oil in the air/hydraulic combination cylinder is sufficient or not. Oil amount in the air/hydraulic cylinder can be identified by looking the transparent oil hose at the side of the air/hydraulic cylinder. The normal oil amount is when the sawblades are raising, the oil lever is about 90mm from the hose bottom. When the sawblades are lowering, the oil lever is about 90mm from the hose top.

To fill oil into the air/hydraulic cylinder, loosen the cap at the top of the cylinder. Fill #10 hydraulic oil. Disconnect air source before filling oil.

⚠ WARNING

Disconnect air source before filling oil into air/hydraulic cylinder, otherwise the oil may splash out.

LUBRICATION

1. Lubricate the saw spindle bearing by shooting grease through the two grease nipples provided on each spindle quill.

2. Periodically check the oil amount in air/hydraulic combination cylinder.

MAINTENANCE

1. Buildup of sawdust and other debris can cause the machine to cut inaccurately. Periodic cleaning is not only recommended, but also mandatory for accurate-cutting.

2. Periodically check the oil in the air/hydraulic combination cylinder.

3. Clean the sawdust existed on the machine.

4. Always keep the sawblade sharp.

ADDITIONAL SAFETY RULES FOR THIS MACHINE

1) As with all machine, there is a certain amount of hazard involved with the use of this machine. Use the machine with the respect and caution demanded where safety precautions are concerned. When normal safety precautions are overlooked or ignored, personal injury to the operator can result.

2) LIMITED WARRANTY This warranty does not apply to personal injury and defects due directly or indirectly to misuse, abuse, negligence or accidents, normal wear-and tear, repair or alterations outside our facilities, or to a lack of maintenance.

3) IF YOU ARE NOT thoroughly familiar with the operation of this machine, obtain advice from your supervisor, instructor or other qualified person. Or, please contact the company who sold the machine to you, and request for the correct instruction of operating. When you are not sure what is the correction operation, please do not use this machine.

4) IF AT ANY TIME YOU ARE EXPERIENCING DIFFICULTIES performing the intended operation, stop using the machine! Then contact the distributor's service department or ask a qualified expert how the operation should be performed.

5) NEVER ALLOW UNSUPERVISED OR UNTRAINDED PERSONNEL TO OPERATE THE MACHINE make sure any instructions you give in regards to machine operation are approved, correct, safe, and clearly understood.

6) NEVER OPERATE A MACHINE WHEN TIRED, OR UNDER THE INFLUENCE OF DRUGS OR ALCOHOL. Full mental alertness is required at all times when running a machine.

7) NEVER LEAVE TOOL RUNNING UNATTENDED. TURN POWER OFF. DO NOT leave tool until it comes to a complete stop.

8) MAKE SURE wiring codes are recommended electrical connection instructions are followed, and that the machine is properly grounded.

OPERATION PROCEDURES

1. Before performing operation, make sure everything is properly adjusted and checked.

2. Place the workpiece to be cut on the table.

3. Turn on power switch on the control panel.

4. Turn on motor start switch to start both sawblades running.

5. Treadle on the foot switch, then the machine will perform a cycle of motion.

6. Treadle the foot switch again for performing next cycle of motion.

NO.	DESCRIPTION	Q'TY
1	TOP GUARD	1
2	FRONT GUARD	1
3	TRANSPARENT FRONT GUARD	1
4	DOOR LATCH	2
5	THROTTLE VALVE	2
6	VERTICAL CLAMP CYLINDER	1
7	CYLINDER FIX PLATE	2
8	SUPPORT FIX PLATE	1
9	SUPPORT ROD	1
10	CLAMPING V BLOCK	1
11	CLAMPING RUBBER SCREW	2

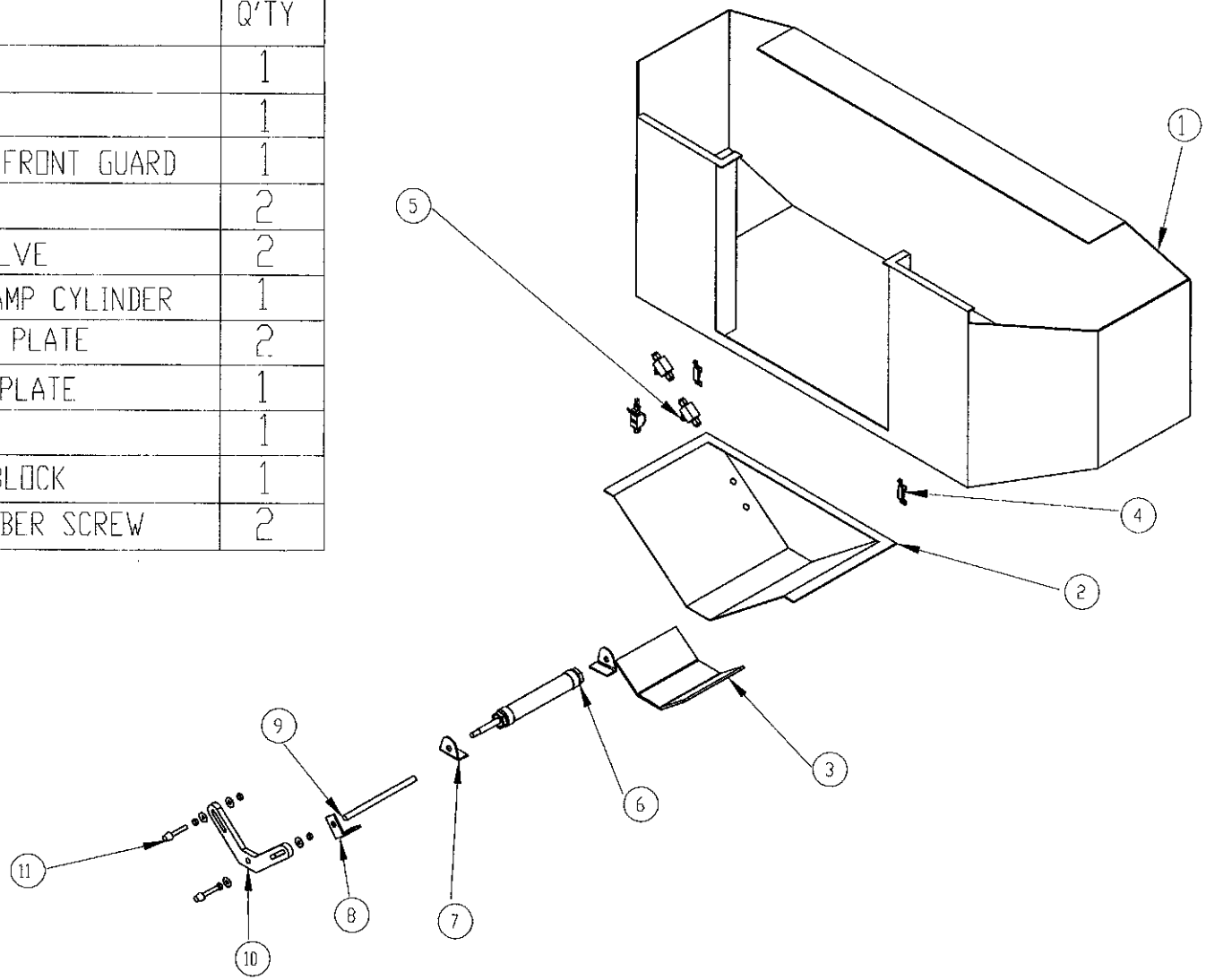

DRAWING 6-1

ADDITIONAL SAFETY RULES FOR THIS MACHINE

9) MAKE all adjustments with the power "OFF".

10) DISCONNECT machine from power source when make repairs.

11) KEEP knives sharp and free of all rust and pitch.

12) DO NOT operate this machine when the guard is removed.

13) KEEP fingers and hands away from the cutting area.

14) NEVER start the machine with the workpiece in contact with the cutterhead.

15) CHECK MATERIAL for loose knots and other defects before operating.

16) MAKE SURE the workpiece is free from nails and other foreign objects which could cause injury or damage to the knives.

17) MAKE SURE the knives are properly secured to the machine, as explained in the instruction manual, before turning on power.

18) REMOVE SHAVINGS only with the power "OFF".

19) KEEP HANDS away from the top surface of the board near the feed rollers.

20) BEFORE LEAVING the machine, make sure the work area is clean.

21) SHOULD any part of your machine be missing, damaged or fail in any way, or any electrical component fail to perform properly, shut off switch and remove plug from power supply outlet. Replace missing, damaged or failed parts before resuming operation.

22) ATTENTION!! Before installation & operation, please make sure the worker have been trained and be effected insurance on. Also, for the dangerous machine, the seller in local has to insure "Product Liability Insurance".

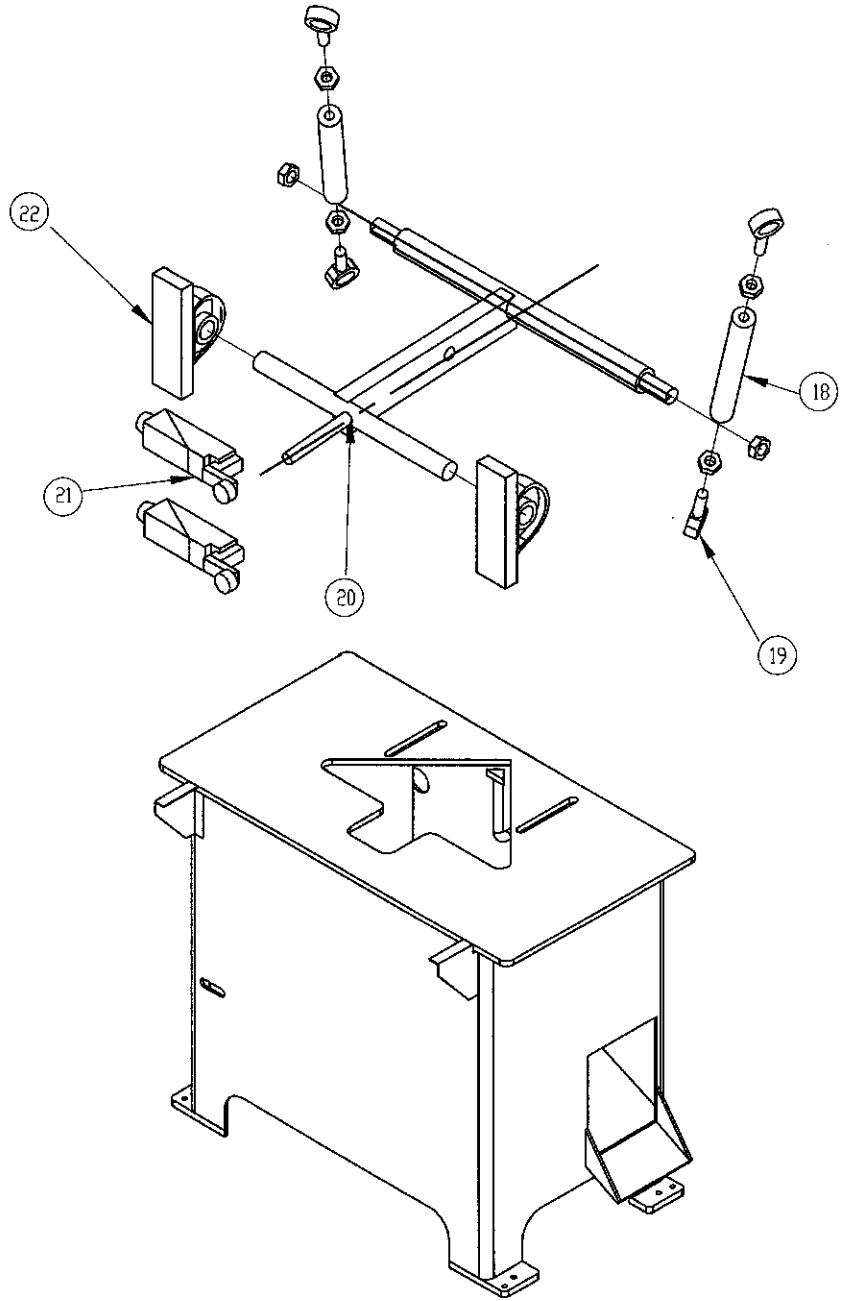

NO.	DESCRIPTION	Q'TY
18	VERTICAL PULLING BAR	2
19	EYELET BEARING	4
20	CONNECTION ROD BRACKET	1
21	MICRO SWITCH	2
22	BRACKET BEARING	2

DRAWING 6-3

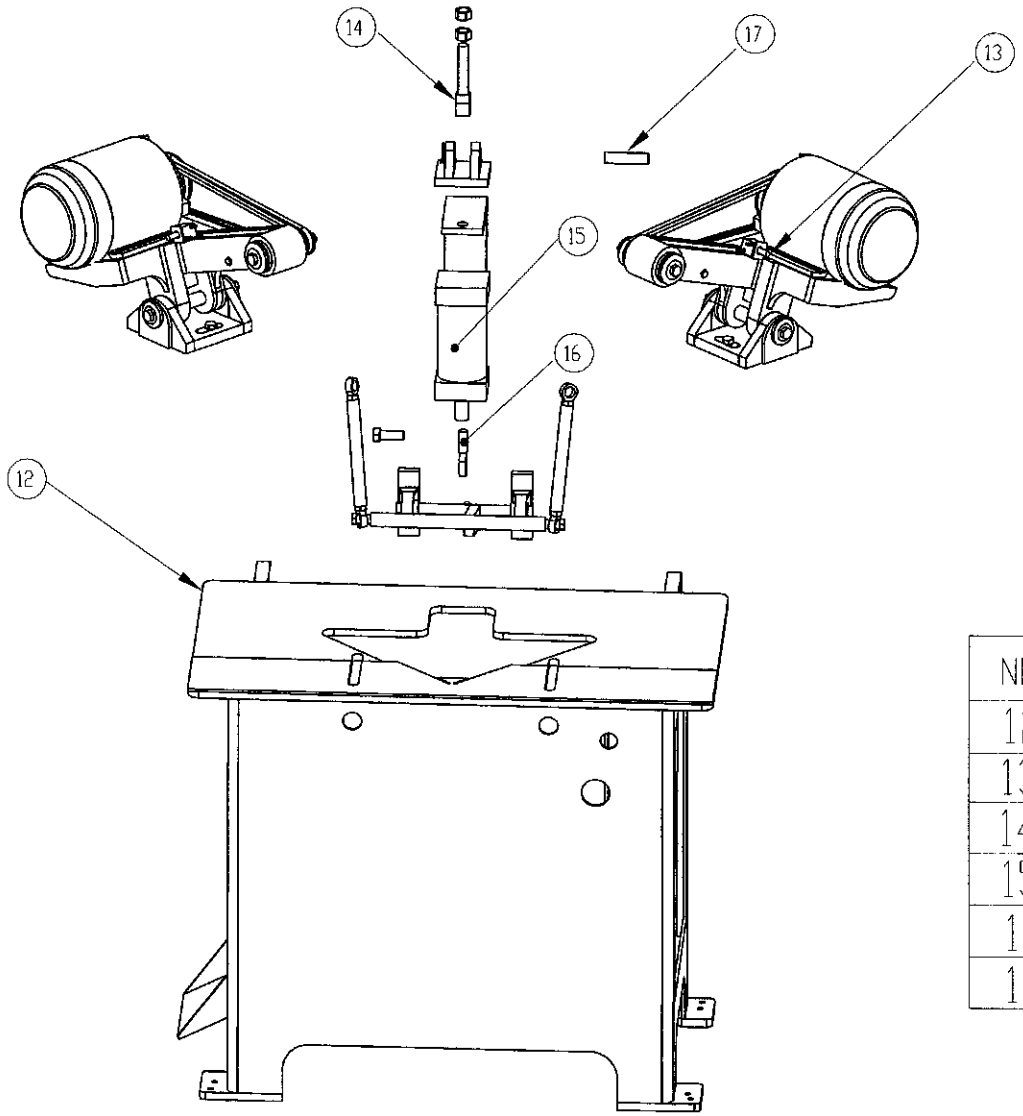

NO.	DESCRIPTION	Q'TY
12	BASE	1
13	BLADE BRACKET	2
14	LIFTING RING	1
15	LOWERING CYLINDER	1
16	EYELET BEARING	1
17	FIX PIN	1

DRAWING 6-2

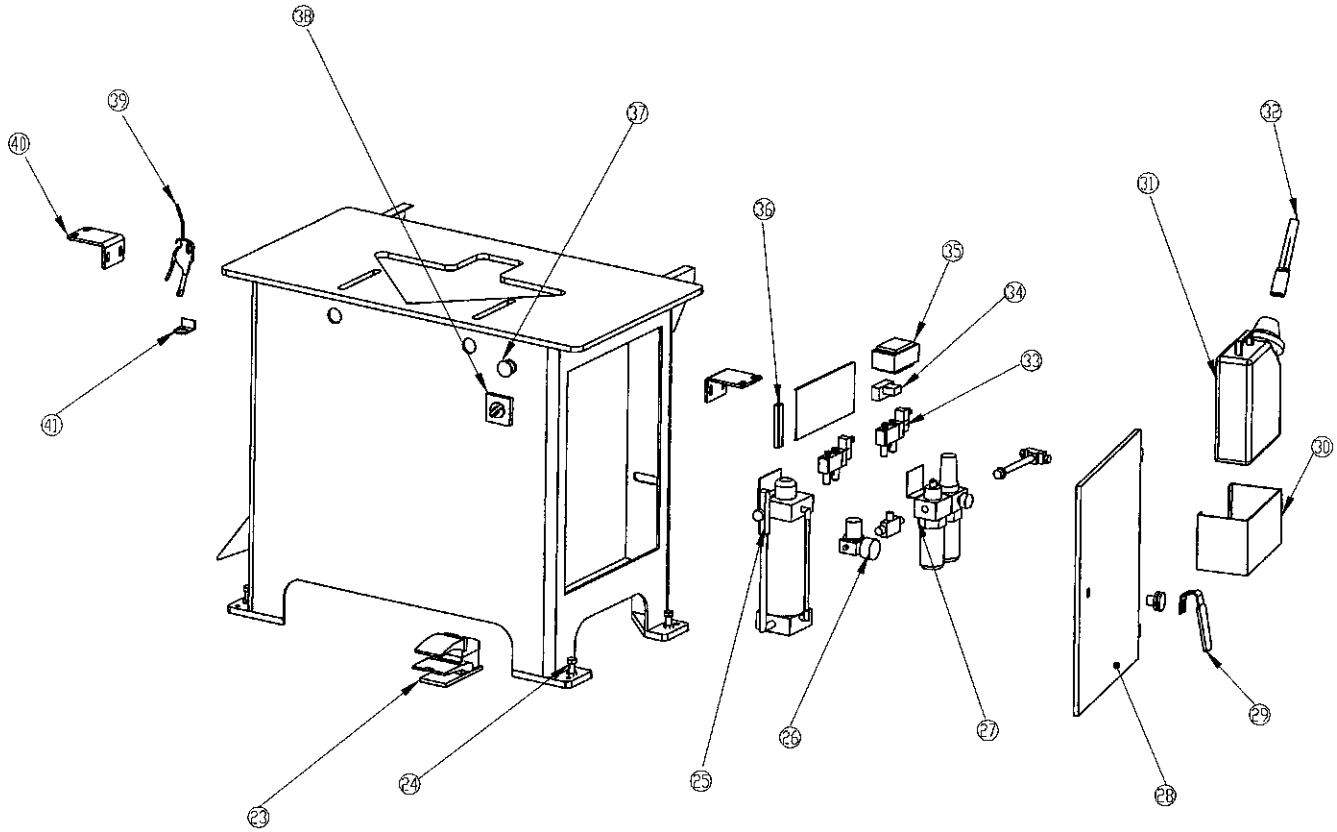

NO.	DESCRIPTION	Q'TY
23	FOOT SWITCH	1
24	LEVELING SCREW	4
25	AIR/HYD. CYLINDER	1
26	PRESSURE REGULATION KNOB	1
27	F.R.L. COMBINATION	1
28	SIDE DOOR	1
29	HANDLE	1
30	OIL TANK SUPPORT	1
31	CUTTING FLUID TANK	1
32	CHECK VALVE	2
33	SOLENOID VALVE	2
34	RELAY	1
35	TRANSFORMER	1
36	TERMINAL CHANNEL	1
37	EMERGENCY STOP SWITCH	1
38	POWER SWITCH	1
39	AIR GUN	1
40	TABLE CONNECTION PLATE	2
41	AIR GUN HOLDER	1

DRAWING 6-4

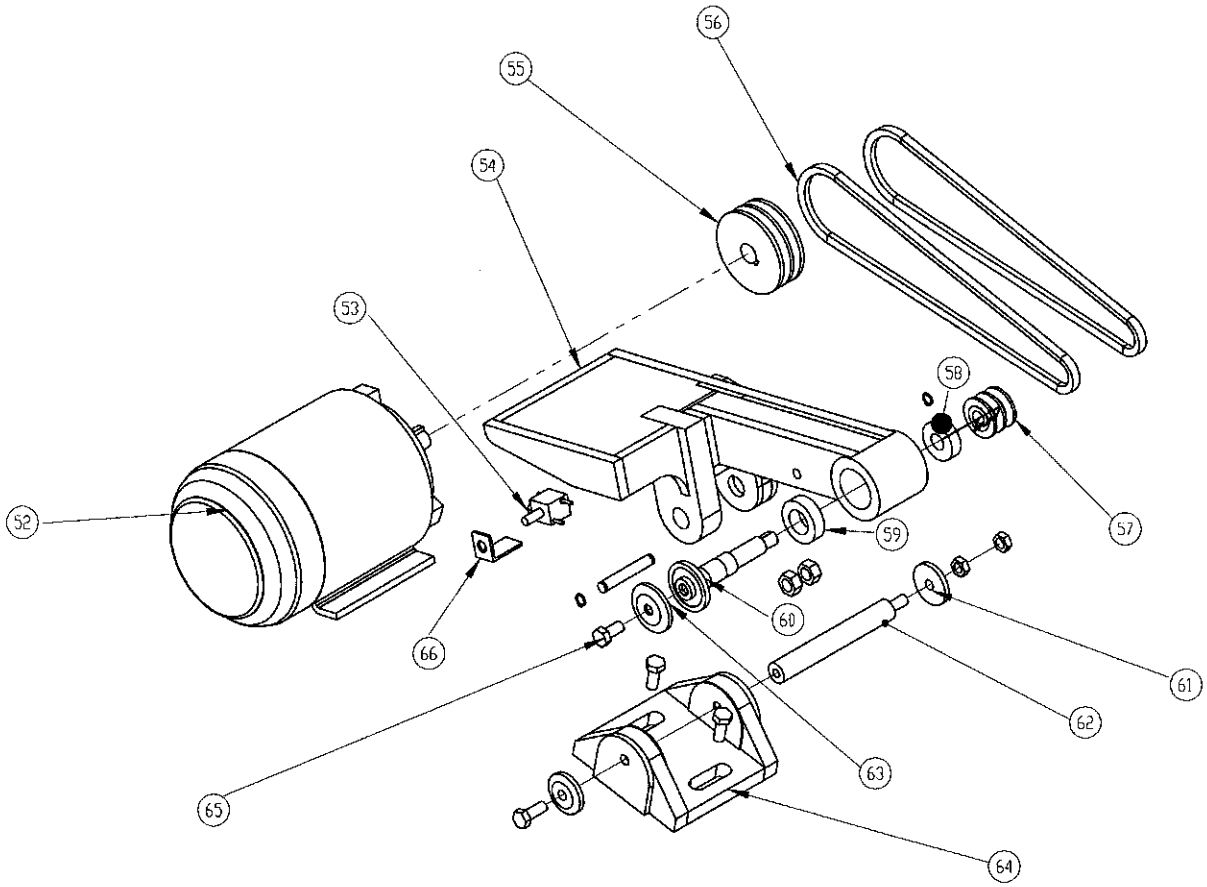

NO.	DESCRIPTION	Q'TY
52	MOTOR	2
53	MIST SPRAY VALVE	2
54	ROCKING ARM UPPER UNIT	2
55	MOTOR PULLEY	2
56	BELT	4
57	SPINDLE PULLEY	2
58	SPINDLE OUTSIDE BEARING	2
59	SPINDLE INSIDE BEARING	2
60	SPINDLE	2
61	FIX PIECE	4
62	SHAFT	2
63	BLADE WASHER	2
64	ROCKING ARM LOWER UNIT	2
65	BLADE LOCK SCREW	2
66	VALVE HOLDER	2

DRAWING 6-6